ALE PILING

DATA SHEET

SP60/DW210 SIDE GRIP PILING RIG SHEET 1of 2

Capability

- Install or extract sheet piles, H-beams, small diameter tubular piles, timber piles, lite piles, trench sheets up to 14m long.*[1]
- Handle, pitch and drive, with computer-controlled accuracy, any of the above.
- Work from floating pontoons, barges or above water with ease.
- Work on tarmaced or concrete surfaces easily

Productivity

- No rigging or de-rigging of equipment required.
- Work in and access areas conventional piling equipment cannot.
- No expensive piling gates or guide required.
- Install and extract piles in as little as 4m of headroom.*[2]
- Access through 2500mm!

Safety

- No manual handling, slinging or manual pile pitching required.
- No working at height.
- Rear and side vision from colour camera.
- No leader mast or crane booms to topple over.
- Install piles up to 7m away from base machine without man access.

Standard Equipment

Bio oil, Rear view camera, Extra work lights, Flashing lights, Spill kit

Optional Equipment

Height limiter, Auger, Forks

Ale Piling, Unit 8, The Wharf, Wharf Road, Tyseley, Birmingham, B11 2DA

T – 0845 0509720
F – 0845 0509721
e – info@ale-piling.com
www.ale-piling.com

ALE PILING

DATA SHEET

SP60/210DW SIDE GRIP PILING RIG SHEET 2 of 2

Base Machine Specification

MACHINE TYPE -210 DW wheeled excavator, hybrid modified to operate with side grip piling hammer.
ENGINE-six cylinder turbocharged 5890 cc: diesel engine producing 162 hp, meeting European stage III rating
HYDRAULIC SYSTEM-twin axial piston pumps, producing 237 ltpm each, operates on synthetic biodegradable BD46 hydraulic oil.

ELECTRICAL SYSTEM-24 V

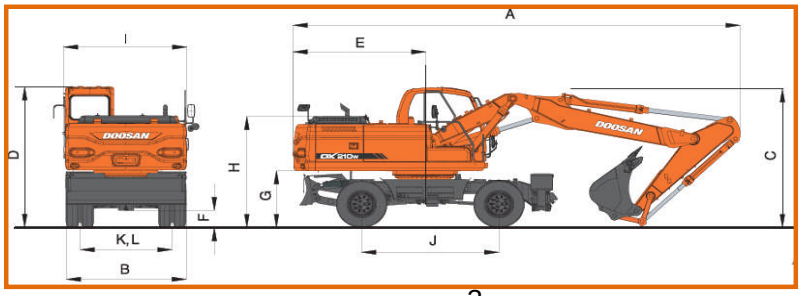

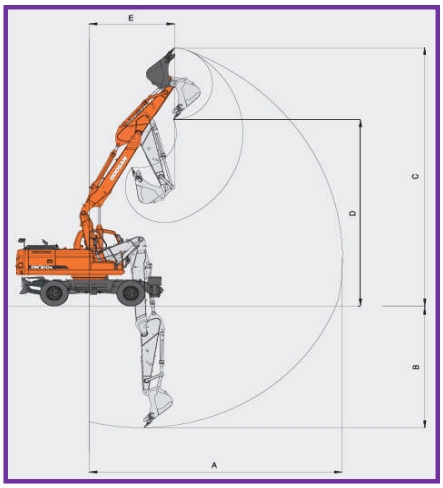

Base Machine Dimensions*3

Dimensions taken from diagram above.

Boom type (two piece)		5400 mm
Arm Type		2400 mm
A	Shipping length	9210 mm
B	Shipping width	2500 mm
C	Shipping height (boom)	3140 mm
D	Height over cab	3140 mm
E	Counter weight swing clearance	2750 mm
F	Ground clearance	350 mm
G	Counter weight clearance	1259 mm
H	Engine cover height	2485 mm
I	Upper housing width	2530 mm
J	Wheel base	2850 mm
K,L	Tread width	1914 mm

Overall weight of machine, 20600 kg.

Base Machine Working Ranges*4

Dimensions taken from diagram above.

A	Maximum reach	9405 mm
B	Maximum reach depth	5625 mm
C	Maximum reach height	10560 mm
D	Maximum dumping height	7620 mm
E	Maximum digging radius	3185 mm

Hammer Attachment Specification

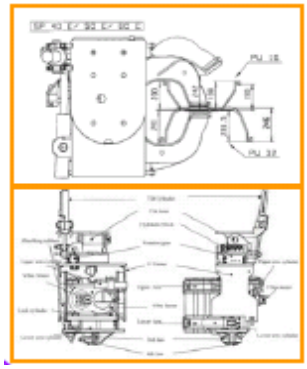

Model type	SP60
Weight	1885 kg
Height	2037 mm
Width	1002 mm
Depth	1148 mm
Headroom	1810 mm
Articulation	360°
Tilt angle	45° L/R
Oil flow at 270 bar	180 Ltpm
RPM	3000 @270 bar
Vibraforce	600 KN
Piling Action	Vibratory

Notes-

Al e Piling's equipment may be interchangeable and accept alternative equipment, if required.
*1 pile length and section suitability is subject to ground conditions and environmental considerations.
*2 minimum working height is subject to certain requirements, please ask for details.
*3 & *4 are excavators manufactures guidance figures, if your requirements are similar to these figures, please ask for confirmation.
Ale Piling accept no liability for the accuracy of these figures. As the company has a policy of continual improvement these figures can be changed without notice.

Ale Piling, Unit 8, The Wharf, Wharf Road, Tyseley, Birmingham, B11 2DA
T – 0845 0509720
F – 0845 0509721
e – info@ale-piling.com
www.ale-piling.com