ALE PILING

DATA SHEET

SP60/250 SIDE GRIP PILING RIG

Capability

- Install or extract sheet piles, H-beams, small diameter tubular piles, timber piles, lite piles, trench sheets up to 14m long.*[1]
- Handle, pitch and drive, with computer-controlled accuracy, any of the above.
- Work from floating pontoons, barges or above water with ease.

Productivity

- No rigging or de-rigging of equipment required.
- Work in and access areas conventional piling equipment cannot.
- No expensive piling gates or guide required.
- Install and extract piles in as little as 4m of headroom.*[2]

Safety

- No manual handling, slinging or manual pile pitching required.
- No working at height.
- Rear vision from colour camera.
- No leader mast or crane booms to topple over.
- Install piles up to 8m away from base machine without man access.

Standard Equipment

Bio oil, Rear view camera, Extra work lights, Flashing lights, Spill kit

Optional Equipment

Height limiter, Auger, Forks

Ale Piling, Unit 8, The Wharf, Wharf Road, Tyseley, Birmingham, B11 2DA

T – 0845 0509720
F – 0845 0509721
e – info@ale-piling.com
www.ale-piling.com

ALE PILING

DATA SHEET

SP60/250 SIDE GRIP PILING RIG

Base Machine Specification

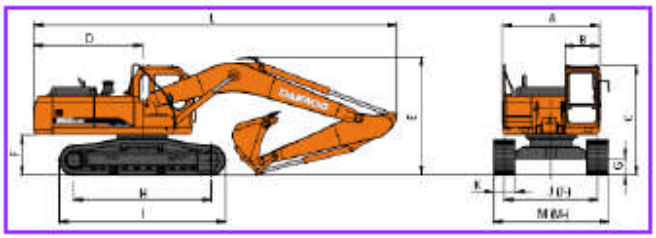

MACHINE TYPE -250 crawler excavator, hybrid modified to operate with side grip piling hammer.
ENGINE-six cylinder turbocharged 5785 cc: diesel engine producing 162 hp, meeting European stage II rating
HYDRAULIC SYSTEM-twin axial piston pumps, producing 224 ltpm each, operates on synthetic biodegradable BD46 hydraulic oil.

ELECTRICAL SYSTEM-24 V

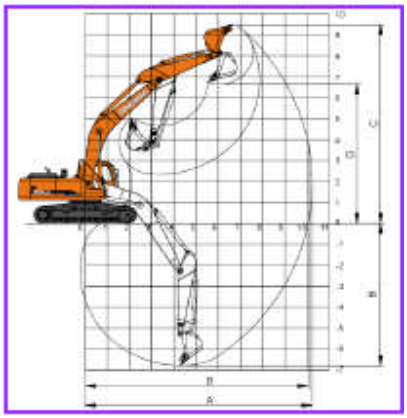

Base Machine Dimensions*3

Dimensions taken from diagram above.

A	Overall width of upper structure	2710 mm
B	Overall width of cab	960 mm
C	Overall height of cab	3000 mm
D	Tail swing radius	3035 mm
E	Overall height of boom	3250 mm
F	Clearance under counterweight	1110 mm
G	Ground clearance	450 mm
H	Tumbler distance	3830 mm
I	Track length	4635 mm
J	Track gauge	2600 mm
K	Track shoe width	800 mm
L	Overall length	10110 mm
M	Overall track width	3400 mm

Overall weight of machine, 25,200 kg. Ground pressure 0, 38 kgf/cm^2

Base Machine Working Ranges*4

Dimensions taken from diagram above.

A	Maximum reach	10240 mm
B	Maximum reach at ground level	10060 mm
C	Maximum reach depth	6790 mm
D	Maximum reaching height	9500 mm
E	Maximum pile reaching height	6640 mm
F	Maximum downwards reach	6080mm
G	Maximum pile reach	6620 mm

Hammer Attachment Specification

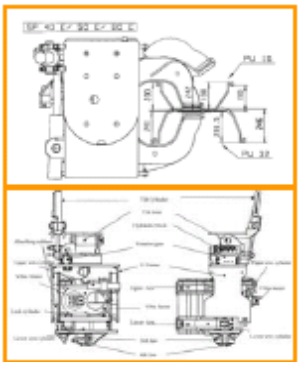

Model type	SP60
Weight	1830 kg
Height	2070 mm
Width	1002 mm
Depth	1148 mm
Headroom	1810 mm
Articulation	360°
Tilt angle	45° L/R
Oil flow at 270 bar	180 Ltpm
RPM	3000 @270 bar
Vibraforce	600 KN
Piling Action	Vibratory

Notes-

Al e Piling's equipment may be interchangeable and accept alternative equipment, if required.
*1 pile length and section suitability is subject to ground conditions and environmental considerations.
*2 minimum working height is subject to certain requirements, please ask for details.
*3 & *4 are excavators manufactures guidance figures, if your requirements are similar to these figures, please ask for confirmation.
Ale Piling accept no liability for the accuracy of these figures. As the company has a policy of continual improvement these figures can be changed without notice.

Ale Piling, Unit 8, The Wharf, Wharf Road, Tyseley, Birmingham, B11 2DA

T – 0845 0509720
F – 0845 0509721
e – info@ale-piling.com
www.ale-piling.com